SERVOMATE® DISC COUPLINGS

sit DRIVE SOLUTIONS

SERVOMATE® disc couplings

SERVOMATE® disc couplings have been specially designed for servomotor applications. The aluminium hubs and the compact design provide low mass moment of inertia resulting in a reliable and maintenance free coupling for high speeds. The double disk pack execution has been designed for applications with radial misalignment. **Note:** It is possible to have aligned keyways upon inquiry.

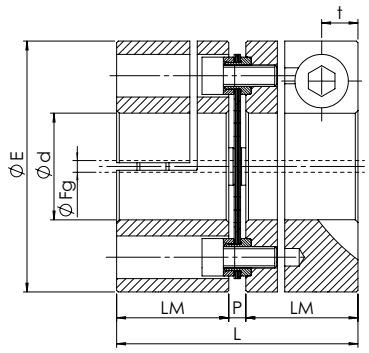

1 disc pack GSM version

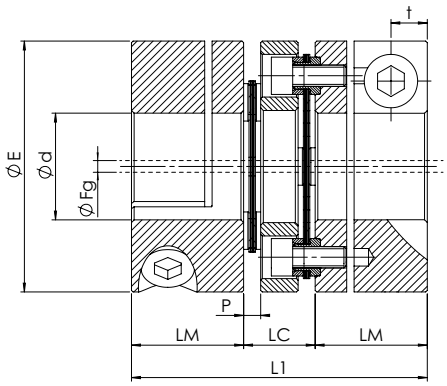

2 disc packs GSMC version

Size	Dimensions [mm]								Screws		Weights and moments of inertia				T_{KN} [Nm]	T_{Kmax} [Nm]	Torsional rigidity C_T [Nm/rad]		Max. speed [rpm]
											GSM		GSMC						
	** Prebored Fg	d_{max}	LC	LM	L	L1	P	t	Type	Ms [Nm]	W* [Kg]	J* [Kg · m²]	W [Kg]	J* [Kg · m²]			GSM	GSMC	
15	5,5	20	13	21	45	55	3	6,8	M6	10	0,16	52 · 10-6	0,20	63 · 10-6	20	40	12.000	6.000	16.000
20	7,5	25	19	24	52	67	4	6,5	M6	10	0,30	149 · 10-6	0,40	194 · 10-6	30	60	30.000	15.000	12.000
25	9,5	35	24	32	69	88	5	9,0	M8	25	0,53	384 · 10-6	0,66	492 · 10-6	60	120	60.000	30.000	10.000

*= with max bore.
**= prebored not in tolerance.

Size	**GSM** misalignment			**GSMC** misalignment		
	Radial [mm]	Axial [mm]	Angular [°]	Radial [mm]	Axial [mm]	Angular [°]
15	-	0,5	1	0,16	1,0	2
20	-	0,6	1	0,25	1,2	2
25	-	0,8	1	0,30	1,6	2

Size	Trasmissible torque [Nm] related to shaft diameter [mm]														
	Ø10	**Ø11**	**Ø12**	**Ø14**	**Ø15**	**Ø16**	**Ø19**	**Ø20**	**Ø22**	**Ø24**	**Ø25**	**Ø28**	**Ø30**	**Ø32**	**Ø35**
15	20	22	24	28	30	32	38	40	-	-	-	-	-	-	-
20	-	-	24	28	30	32	38	40	44	48	50	-	-	-	-
25	-	-	-	-	55	59	70	73	81	88	92	103	110	117	128

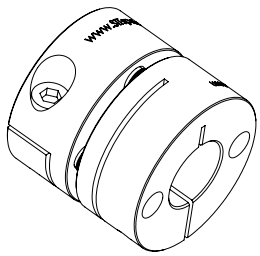

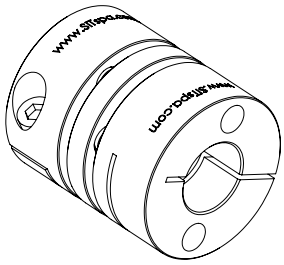

Coupling **GSM** **020**

1 disc pack execution: GSM
2 disc packs + spacer execution: GSMC

Size

M_S	Screw tightening torque	Nm
T_{KN}	Coupling nominal torque	Nm
T_{Kmax}	Coupling maximum torque	Nm
C_T	Torsional rigidity	Nm/rad
J	Moment of inertia	Kg · m²
W	Weight	kg

Selection in according to DIN 740.2

The coupling must be chosen so the applied working loads do not exceed the allowable values whatever the working conditions are.

1. Check the load with respect to the nominal torque
The nominal coupling torque must be greater than or equal to the nominal torque of the drive machine for all working temperatures.

$$T_{KN} \geq T_N \cdot S_\theta \cdot S_D$$

2. Check the load with respect to the torque peak values
The maximum coupling torque must be greater than or equal to the torque peaks that occur during operation for all working temperatures.

$$T_{KN} \geq T_S \cdot S_\theta \cdot S_D + T_N \cdot S_\theta$$

Motor-side peaks: $T_S = T_{AS} \cdot \frac{1}{m+1} \cdot S_Z$

Driven-side peaks: $T_S = T_{LS} \cdot \frac{m}{m+1} \cdot S_Z$

Or, in case of sporadic spikes: $T_{K\max} \geq T_S \cdot S_\theta \cdot S_D + T_N \cdot S_\theta$

If the peak does not cover the nominal T_N, ontribution, the T_N S_θ factors can be disregarded.

Calculation coefficients

S_θ = Temperature factor

T (°C)	-30 °C / +90 °C
S_θ	1

S_D = Torsional rigidity factor

Tooling machines	Positioning system	Speed and angular acceleration indicator
1,5	2	2,5/4

Per macchine utensili - servomotori applicare 1,5 - 2.

Starting frequency factor

S/h	< 20	< 60	< 120	< 180	< 240	> 240
S_z	1	1,2	1,4	1,6	1,8	2

m = Mass factor = $\frac{J_A}{J_L}$